Direct expansion close control units

Power Series - 1 and 2 cooling circuits capacities from 7 to 138 kW

R-410A

- High capacities and compact dimensions
- Great reliability and high technology
- Wide range of options

scroll compressors | air cooled unit | water cooled unit | only cooling units

EMICON
AIR CONDITIONING AND INDUSTRIAL APPLICATION

Direct expansion close control units

Direct expansion close control units

The range of close control units, **Power ED series**, is particularly indicated for use in technological centres, data processing rooms, in telecom centres and in such applications where it is important to keep the thermo-hygrometric conditions constant all over the year, so to assure the correct operation of the equipments installed in these sites. Depending on the cooling capacity, they are available with 1 and 2 cooling circuits. Thanks to their technologically advanced design, these close control units are able to control the ambient temperature with remarkably high precision and, when the humidity level is required, to adapt their cooling capacity to the room requirements, all automatically managed by the microprocessor on board. The high technology employed during their design together with the use of the best components available on the markets, make these units extremely reliable and therefore able to work for long periods, without a break. These units are particularly easy to install also in small spaces and easily accessible on the front side for ordinary and extraordinary service operations. They are completely assembled and tested in the factory.

Available versions

- ED.X: with remote air condenser
- ED.H: with water cooled condenser on board
- ED.E: with remote air condensing unit

Available configurations, related to the air return and discharge:

- U front air return, upflow air discharge
- V bottom air return, upflow air discharge
- B back air return, upflow air discharge
- D top air return, downflow air discharge

Main components

Structure realized with a framework and internal parts made of galvanized steel riveted profiles and supports, making the structure strong and suitable also for extreme transport and handling conditions. The external panels, fixed to frame with quick opening connections, are made of pre-painted steel sheet (RAL 9004), ensuring a long-term durability to the unit. They are internally insulated with self-extinguishing sound-proofing material (class HF1 – UL94) reducing the overall sound level of the unit. On request (option IS1), it is available the sound-proofing insulation with class 1 material in conformity to the main European regulations in force. All the front and side panels can be dismantled so to allow an easy access to the main components. Moreover, the front of the unit is provided with double panels and inspection window (not available for version U), suitably arranged to let the unit work also with open panels during technical interventions, to allow more accurate regulations and more quick timing for ordinary and extraordinary service operations.

High-efficiency scroll compressor (EER > 3.2 at ARI conditions), with low sound level, internal heat protection, installed on rubber vibration dampers, supplied with crankcase heater.
In the case of 2 circuit units, in case of problem on one of the circuit, the 50% operation of the unit is anyway granted. In the case of ED.E units, compressor is on board of the remote condensing unit MCX Kc.

Single-inlet and backward curved centrifugal fans made of high-performance composite material, directly coupled to a three-phase electrical motor with IP54 Class F protection and provided with a thermal protection inside the motor winding. The fans are fixed on suitable supports reducing the transmission of vibration to the frame and the impeller is statically and dynamically balanced with long-life bearings. It is possible to regulate the fan speed by means of an autotransformer and to adjust their air flow to the head pressure requested on site. It is clear that a higher fans speed rotation involves an increase in the sound level of the unit. All the units are equipped with low airflow and clogged filter alarms which, by means of differential pressure switches, stop the unit operation in case of fans problems and give a signal on microprocessor for replacement respectively.

Direct expansion evaporating coil, realized with copper tube and aluminium fins, it is suitably sized with a wide exchange surface and a low air crossing speed so to allow a remarkable heat exchange and reduce the pressure drops on the air side. It is provided with a hydrophilic treatment to reduce the surface tension between water and metal surface, promoting film condensation and avoiding the risk of condensing drops outside the drain tray.

Condensing **drain tray**, made in corrosion proof peraluman, placed underneath the evaporating coil, it is provided with a flexible pipe for condensing water discharge.

Washable and self-extinguishing **air filters** Efficiency G4 – of pleated type, they are made of synthetic fibre and are contained in a suitable metal frame. Their pleated arrangement, with a wide surface area, ensures a higher filtering efficiency and low pressure drops.

Only for ED.H version, **weld-brazed plate condenser** in AISI 316 stainless steel, with pipes and patented manifold so to reach a high heat exchange coefficient. Its design allows a uniform water distribution, compatibly with pressure drops.

Cooling circuit made of: electronic thermostatic valve, sight glass, dehydrating filter, safety device, high pressure switch, solenoid valve (when necessary for ED.X version), liquid receiver, shut-off valve on compressor discharge and on liquid line (for ED.X and ED.H versions). Thanks to the electronic thermostatic valve, there is a more accurate regulation of the evaporating pressure/temperature in all working conditions, with superheating at a constant value.

Electric board in compliance with CE norms, protected by a panel is separated by the air flow and is provided with main switch, automatic switches, remote control switches, motor protection switches, low-tension auxiliary circuits and terminal board for free contacts and remote general alarm, magnetothermic switches for humidifier and electric heaters (when installed).

Unit management **microprocessor** installed inside the electrical board, complete with hour counter and electronic card to program the switch-over and rotation between to units, after a pre-set time. On this purpose, in case of order, the information necessary for programming must be clearly defined. It allows a multi-language display reading, a detailed description of parameters, the possibility to manage up to 16 units, to manage non standard communication protocols, a quickest access to the program, the control of the electronic thermostatic valve and of the humidifier, the control of modulating valves.

For ED.X version, the remote condensers to be matched to these units (CR Kc) are still provided with a condensing pressure control and main switch.

ED.X - ED.H Version

U front air return, upflow air discharge

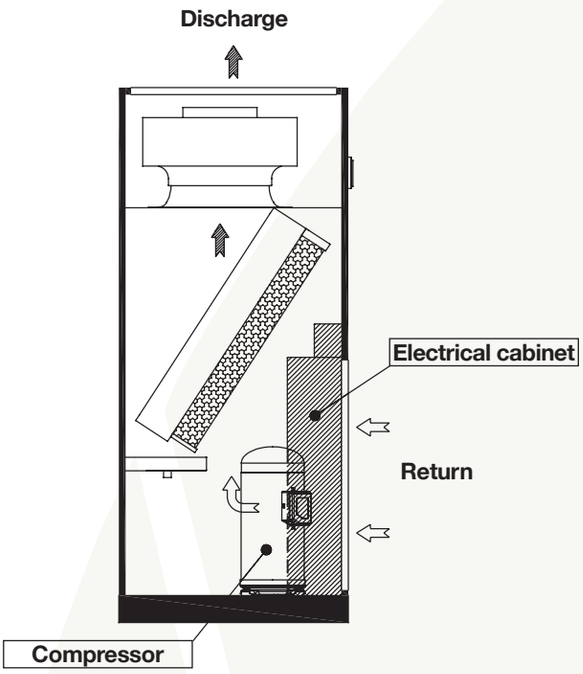

B back air return, upflow air discharge

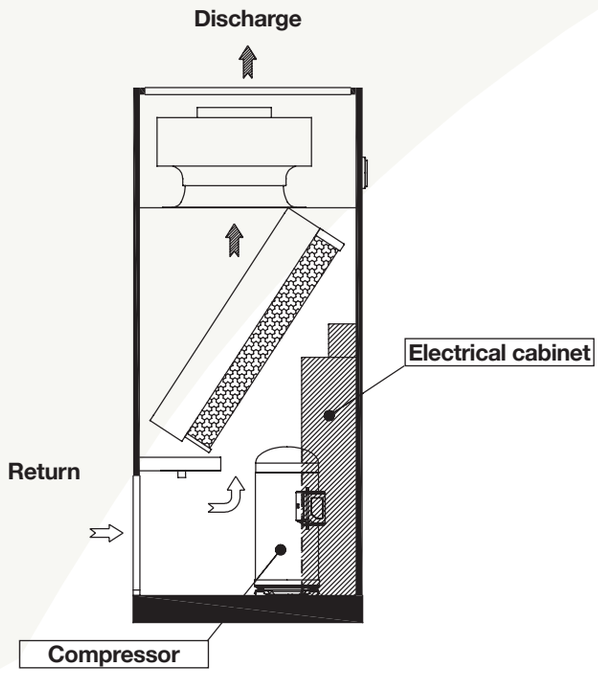

V bottom air return, upflow air discharge

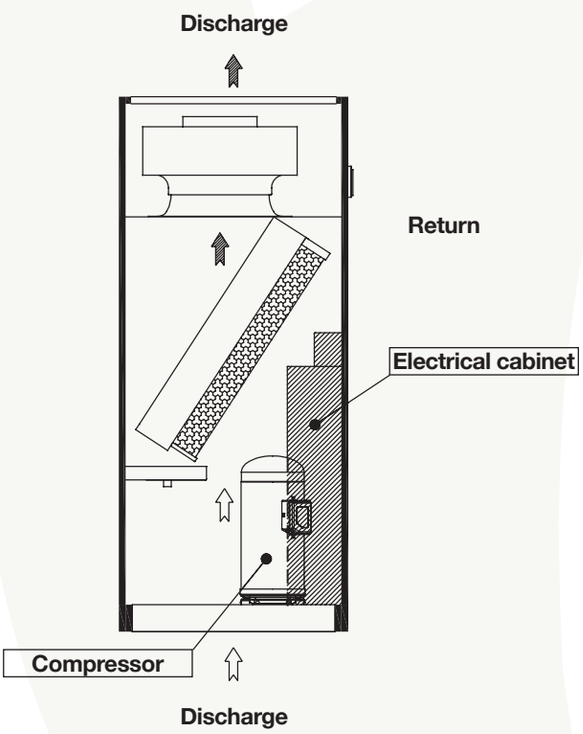

D top air return, downflow air discharge

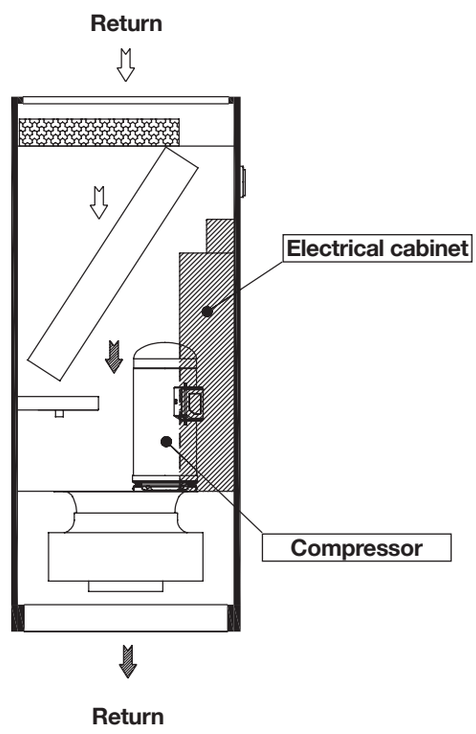

Close control units with remote air condenser

ED.X - 1 circuit

Frame					2		3				4
Model		**71**	**81**	**101**	**131**	**161**	**211**	**231**	**261**	**271**	**281**
AMBIENT TEMP. 27 - 50% R.H.											
Total Cooling Capacity	kW	7,3	9,0	10,2	12,8	17,2	22,6	24,0	26,1	27,0	28,9
Sensible Cooling Capacity	kW	6,4	8,0	9,2	11,3	15,2	20,3	20,7	21,0	23,4	25,1
SHR		88%	89%	90%	88%	88%	90%	86%	80%	87%	87%
Input power of compressor	kW	1,7	2,0	2,2	2,9	3,8	4,8	4,8	5,8	5,5	6,3
AMBIENT TEMP. 24 - 50% R.H.											
Total Cooling Capacity	kW	6,7	8,2	9,3	12,1	15,8	20,7	22,3	24,4	24,8	26,8
Sensible Cooling Capacity	kW	6,1	7,6	8,8	10,8	14,6	19,3	19,6	20,4	22,5	24,0
SHR		91%	93%	94%	89%	92%	93%	88%	84%	91%	90%
Input power of compressor	kW	1,7	2,1	2,2	2,9	3,8	4,8	4,8	5,8	5,5	6,3
AMBIENT TEMP. 22 - 50% R.H.											
Total Cooling Capacity	kW	6,4	7,9	8,8	11,6	15,1	19,7	21,2	23,3	23,7	25,5
Sensible Cooling Capacity	kW	5,8	7,5	8,5	10,7	14,3	18,9	19,6	19,6	22,0	23,5
SHR		91%	95%	97%	92%	95%	96%	92%	84%	93%	92%
Input power of compressor	kW	1,7	2,1	2,3	2,9	3,8	4,9	4,8	5,9	5,5	6,3
Scroll compressors	n.	1	1	1	1	1	1	1	2	1	1
Cooling circuits	n.	1	1	1	1	1	1	1	1	1	1
U-V-B Versions - AC fans	n.	1	1	1	1	1	1	1	1	1	1
Air flow	m^3/h	2.330	2.330	2.330	3.500	3.500	5.610	5.610	5.610	5.610	7.880
Available pressure (min-max)	Pa	20-99	20-82	20-53	20-99	20-60	20-140	20-94	20-94	20-94	20-242
Motor input power	kW	0,37	0,39	0,42	0,67	0,71	1,03	1,12	1,12	1,12	1,55
D version - AC fans	n.	1	1	1	1	1	1	1	1	1	1
Air flow	m^3/h	2.330	2.330	2.330	3.500	3.500	5.610	5.610	5.610	5.610	7.880
Available pressure (min-max)	Pa	20-67	20-51	20-21	20-67	20-28	20-124	20-78	20-78	20-78	20-170
Motor input power	kW	0,40	0,42	0,46	0,71	0,76	1,07	1,15	1,15	1,15	1,75
Sound pressure level - 2m											
U Version	dB(A)	52	52	52	55	55	58	59	59	59	61
V Version	dB(A)	47	47	47	50	51	54	55	54	55	56
B Version	dB(A)	48	48	48	51	52	55	56	55	56	57
D version	dB(A)	49	48	49	52	53	55	56	56	56	58
Dimensions and weight											
Length	mm	550	550	550	750	750	980	980	980	980	1.160
Width	mm	550	550	550	550	550	750	750	750	750	850
Height	mm	1.980	1.980	1.980	1.980	1.980	1.980	1.980	1.980	1.980	1.980
Weight	kg	171	182	185	233	238	286	294	338	294	363
Remote condenser	CR Kc	9	12	19	19	22	29	29	34	34	34
Power supply	V / Ph/Hz	400 / 3 / 50 + T + N									

ED.X - 1 circuit

Frame		4			5				6	7	
Model		**331**	**371**	**421**	**461**	**501**	**551**	**591**	**771**	**921**	**991**
AMBIENT TEMP. 27 - 50% R.H.											
Total Cooling Capacity	kW	32,7	38,4	43,2	46,4	51,2	54,0	60,4	79,2	94,3	102,5
Sensible Cooling Capacity	kW	28,0	30,5	36,0	44,7	46,9	51,4	49,7	63,2	78,6	90,6
SHR		86%	79%	83%	96%	92%	95%	82%	80%	83%	88%
Input power of compressor	kW	7,3	8,6	9,6	9,6	10,7	10,7	12,3	16,2	21,3	21,4
AMBIENT TEMP. 24 - 50% R.H.											
Total Cooling Capacity	kW	30,0	35,2	39,5	42,9	46,9	50,1	55,6	72,5	87,7	94,1
Sensible Cooling Capacity	kW	27,0	29,4	34,4	42,9	45,1	50,1	48,0	60,9	76,6	87,0
SHR		90%	83%	87%	100%	96%	100%	86%	84%	87%	92%
Input power of compressor	kW	7,2	8,4	9,5	9,6	10,6	10,7	12,3	16,2	21,2	21,3
AMBIENT TEMP. 22 - 50% R.H.											
Total Cooling Capacity	kW	28,7	33,3	37,8	40,8	44,7	47,7	52,9	68,5	82,7	89,7
Sensible Cooling Capacity	kW	26,2	28,2	34,0	40,8	43,7	47,7	45,7	58,2	74,6	85,1
SHR		91%	85%	90%	100%	98%	100%	86%	85%	90%	95%
Input power of compressor	kW	7,2	8,4	9,5	9,5	10,6	10,6	12,2	16,2	21,1	21,2
Scroll compressors	n.	1	1	1	1	1	1	1	1	2	2
Cooling circuits	n.	1	1	1	1	1	1	1	1	1	1
U-V-B Versions - AC fans	n.	1	1	1	2	2	2	2	2	3	3
Air flow	m^3/h	7.880	7.880	7.880	13.820	13.820	13.820	13.820	16.550	21.600	21.600
Available pressure (min-max)	Pa	20-242	20-194	20-194	20-306	20-306	20-260	20-260	20-164	20-236	20-177
Motor input power	kW	1,55	1,69	1,69	2,82	2,82	3,07	3,07	3,49	4,77	5,24
D version - AC fans	n.	1	1	1	2	2	2	2	2	3	3
Air flow	m^3/h	7.880	7.880	7.880	13.820	13.820	13.820	13.820	16.550	21.600	21.600
Available pressure (min-max)	Pa	20-170	20-122	20-122	20-234	20-234	20-188	20-188	20-92	20-140	20-81
Motor input power	kW	1,75	1,88	1,88	3,20	3,20	3,44	3,44	3,88	5,51	5,96
Sound pressure level - 2m											
U Version	dB(A)	61	61	61	61	62	62	63	68	65	66
V Version	dB(A)	57	57	57	57	57	58	59	64	61	61
B Version	dB(A)	58	58	58	58	58	59	60	65	62	62
D version	dB(A)	58	59	59	59	59	60	60	65	63	64
Dimensions and weight											
Length	mm	1.160	1.160	1.160	1.860	1.860	1.860	1.860	2.210	2.565	2.565
Width	mm	850	850	850	850	850	850	850	850	850	850
Height	mm	1.980	1.980	1.980	1.980	1.980	1.980	1.980	1.980	1.980	1.980
Weight	kg	363	373	396	500	502	520	523	628	746	777
Remote condenser	CR Kc	47	47	55	55	64	64	73	97	144	137
Power supply	V / Ph/Hz	400 / 3 / 50 + T + N									

The above capacities are referred to D version.
Operation limits: ambient temperature from 18 to 35°C.
Condensing temperature: 48°C.
The fan motor input power is referred to the minimum pressure of 20 Pa.
Sound pressure level referred at 2 m distance in free field (ISO 3744) with ducted air inlet and outlet (except for air inlet in U version).
The above weight is referred to U version.

Close control units with remote air condenser

ED.X - 2 circuits

Frame						5				
Model		**282**	**332**	**372**	**422**	**462**	**502**	**552**	**592**	**642**
AMBIENT TEMP. 27 - 50% R.H.										
Total Cooling Capacity	kW	26,0	33,4	38,3	44,0	46,9	53,0	56,3	60,3	66,9
Sensible Cooling Capacity	kW	24,1	28,4	30,5	32,6	42,3	47,7	53,3	49,5	52,2
SHR		93%	85%	80%	74%	90%	90%	95%	82%	78%
Input power of compressor	kW	5,8	7,6	8,3	9,6	9,6	11,0	11,0	12,7	14,6
AMBIENT TEMP. 24 - 50% R.H.										
Total Cooling Capacity	kW	24,6	30,5	35,1	40,2	43,6	48,5	51,6	55,4	61,1
Sensible Cooling Capacity	kW	22,8	27,2	29,4	31,2	40,5	45,8	51,5	47,7	50,2
SHR		93%	89%	84%	78%	93%	94%	100%	86%	82%
Input power of compressor	kW	5,8	7,6	8,3	9,7	9,7	11,1	11,0	12,6	14,5
AMBIENT TEMP. 22 - 50% R.H.										
Total Cooling Capacity	kW	23,6	29,4	33,2	38,6	41,6	46,6	48,9	52,7	58,2
Sensible Cooling Capacity	kW	21,9	26,8	28,2	30,6	38,7	44,7	48,9	45,4	48,5
SHR		93%	91%	85%	79%	93%	96%	100%	86%	83%
Input power of compressor	kW	5,9	7,6	8,4	9,7	9,7	11,1	11,1	12,6	14,5
Scroll compressors	n.	2	2	2	2	2	2	2	2	2
Cooling circuits	n.	2	2	2	2	2	2	2	2	2
U-V-B Versions - AC fans	n.	1	1	1	1	2	2	2	2	2
Air flow	m^3/h	7880	7880	7880	7880	13.820	13.820	13.820	13.820	13.820
Available pressure (min-max)	Pa	20-242	20-242	20-194	20-194	20-306	20-306	20-260	20-260	20-260
Motor input power	kW	1,55	1,55	1,69	1,69	2,82	2,82	3,07	3,07	3,07
D version - AC fans	n.	1	1	1	1	2	2	2	2	2
Air flow	m^3/h	7.880	7.880	7.880	7.880	13.820	13.820	13.820	13.820	13.820
Available pressure (min-max)	Pa	20-170	20-170	20-122	20-122	20-234	20-234	20-188	20-188	20-188
Motor input power	kW	1,75	1,75	1,88	1,88	3,20	3,20	3,44	3,44	3,44
Sound pressure level - 2m										
U Version	dB(A)	60	60	61	62	62	62	62	63	63
V Version	dB(A)	55	55	56	57	57	56	58	58	59
B Version	dB(A)	56	56	57	58	58	57	59	59	60
D version	dB(A)	58	58	59	59	59	59	60	60	60
Dimensions and weight										
Length	mm	1.160	1.160	1.160	1.160	1.860	1.860	1.860	1.860	1.860
Width	mm	850	850	850	850	850	850	850	850	850
Height	mm	1.980	1.980	1.980	1.980	1.980	1.980	1.980	1.980	1.980
Weight	kg	399	399	409	409	513	514	532	550	550
Remote condenser	CR Kc	2x19	2x22	2x22	2x29	2x29	2x34	2x34	2x34	2x47
Power supply	V / Ph/Hz	400 / 3 / 50 + T + N								

ED.X - 2 circuits

Frame		6		7						8	
Model		**772**	**852**	**922**	**952**	**992**	**1022**	**1112**	**1122**	**1442**	**1462**
AMBIENT TEMP. 27 - 50% R.H.											
Total Cooling Capacity	kW	77,8	87,7	94,3	97,4	102,5	106,1	114,1	114,3	149,3	151,7
Sensible Cooling Capacity	kW	62,8	74,2	78,6	80,0	90,6	92,1	85,7	86,1	109,6	110,9
SHR		81%	85%	83%	82%	88%	87%	75%	75%	73%	73%
Input power of compressor	kW	17,2	19,2	21,3	22,1	21,4	22,0	25,3	24,6	34,1	32,5
AMBIENT TEMP. 24 - 50% R.H.											
Total Cooling Capacity	kW	71,4	80,1	87,7	90,6	94,1	97,4	104,2	104,6	136,4	138,4
Sensible Cooling Capacity	kW	60,7	71,0	76,6	77,9	87,0	88,4	82,2	82,7	105,1	106,2
SHR		85%	89%	87%	86%	92%	91%	79%	79%	77%	77%
Input power of compressor	kW	16,9	19,1	21,2	22,2	21,3	22,1	25,2	24,4	33,6	32,5
AMBIENT TEMP. 22 - 50% R.H.											
Total Cooling Capacity	kW	67,6	76,6	82,7	85,7	89,7	93,0	99,7	100,1	130,6	132,5
Sensible Cooling Capacity	kW	58,0	69,9	74,6	76,1	85,1	86,7	80,1	80,6	102,8	104,0
SHR		86%	91%	90%	89%	95%	93%	80%	81%	79%	78%
Input power of compressor	kW	16,8	19,0	21,1	22,3	21,2	22,2	25,2	24,3	33,4	32,5
Scroll compressors	n.	2	2	2	4	2	4	4	2	4	2
Cooling circuits	n.	2	2	2	2	2	2	2	2	2	2
U-V-B Versions - AC fans	n.	2	2	3	3	3	3	3	3	4	4
Air flow	m^3/h	16.550	16.550	21.600	21.600	21.600	21.600	21.600	21.600	27.200	27.200
Available pressure (min-max)	Pa	20-164	20-164	20-236	20-236	20-177	20-177	20-177	20-177	20-184	20-184
Motor input power	kW	3,49	3,49	4,77	4,77	5,24	5,24	5,24	5,24	6,92	6,92
D version - AC fans	n.	2	2	3	3	3	3	3	3	4	4
Air flow	m^3/h	16.550	16.550	21.600	21.600	21.600	21.600	21.600	21.600	27.200	27.200
Available pressure (min-max)	Pa	20-444	20-444	20-490	20-490	20-431	20-431	20-431	20-431	438,0	438,0
Motor input power	kW	3,07	3,07	4,20	4,20	4,81	4,81	4,81	4,81	6,32	6,32
Sound pressure level - 2m											
U Version	dB(A)	65	65	65	65	66	66	66	67	67	71
V Version	dB(A)	61	60	60	61	61	61	62	62	62	68
B Version	dB(A)	62	61	61	62	62	62	63	63	63	67
D version	dB(A)	63	63	63	63	64	64	64	64	65	67
Dimensions and weight											
Length	mm	2.210	2.210	2.565	2.565	2.565	2.565	2.565	2.565	3.100	3.100
Width	mm	850	850	850	850	850	850	850	850	850	850
Height	mm	1.960	1.960	1.980	1.980	1.980	1.980	1.980	1.980	1.980	1.980
Weight	kg	615	660	745	761	776	793	830	784	978	1.017
Remote condenser	CR Kc	2x55	2x55	2x64	2x64	2x64	2x64	2x73	2x73	2x97	2x97
Power supply	V / Ph/Hz	400 / 3 / 50 + T + N									

The above capacities are referred to D version.
Operation limits: ambient temperature from 18 to 35°C.
Condensing temperature: 48°C.
The fan motor input power is referred to the minimum pressure of 20 Pa.
Sound pressure level referred at 2 m distance in free field (ISO 3744) with ducted air inlet and outlet (except for air inlet in U version).
The above weight is referred to U version.

Close control units with water cooled condenser on board

ED.H - 1 circuit

Frame					2		3				4
Model		**71**	**81**	**101**	**131**	**161**	**211**	**231**	**261**	**271**	**281**
AMBIENT TEMP. 27 - 50% R.H.											
Total Cooling Capacity	kW	7,6	9,3	10,6	13,8	18,1	23,5	25,5	27,9	28,3	30,8
Sensible Cooling Capacity	kW	6,3	8,1	9,3	12,3	15,5	20,2	22,7	23,7	23,9	27,3
SHR		83%	87%	88%	89%	86%	86%	89%	85%	84%	89%
Input power of compressor	kW	1,5	1,9	2,0	2,6	3,4	4,4	4,3	5,2	5,1	5,8
Condenser water flow	m^3/h	1,6	1,9	2,2	2,8	3,7	4,8	5,2	5,7	5,8	6,3
AMBIENT TEMP. 24 - 50% R.H.											
Total Cooling Capacity	kW	7,0	8,5	9,7	12,7	16,6	21,5	23,5	25,6	26,0	28,2
Sensible Cooling Capacity	kW	6,1	7,7	8,9	11,8	14,9	19,4	21,9	22,8	22,9	26,3
SHR		87%	91%	92%	93%	90%	90%	93%	89%	88%	93%
Input power of compressor	kW	1,5	1,9	2,1	2,6	3,4	4,4	4,3	5,2	5,1	5,7
Condenser water flow	m^3/h	1,5	1,8	2,0	2,7	3,5	4,5	4,8	5,3	5,4	5,9
AMBIENT TEMP. 22 - 50% R.H.											
Total Cooling Capacity	kW	6,7	8,2	9,2	12,1	15,9	20,7	22,2	24,5	24,9	27,0
Sensible Cooling Capacity	kW	5,8	7,6	8,7	11,5	14,6	19,0	21,0	22,3	22,5	25,6
SHR		87%	93%	95%	95%	92%	92%	95%	91%	90%	95%
Input power of compressor	kW	1,5	1,9	2,1	2,6	3,4	4,4	4,3	5,2	5,1	5,7
Condenser water flow	m^3/h	1,4	1,7	2,0	2,6	3,3	4,4	4,6	5,2	5,2	5,7
Scroll compressors	n.	1	1	1	1	1	1	1	2	1	1
Cooling circuits	n.	1	1	1	1	1	1	1	1	1	1
U-V-B Versions - AC fans	n.	1	1	1	1	1	1	1	1	1	1
Air flow	m^3/h	2.330	2.330	2.330	3.500	3.500	5.610	5.610	5.610	5.610	7.880
Available pressure (min-max)	Pa	20-99	20-82	20-53	20-99	20-60	20-140	20-94	20-94	20-94	20-242
Motor input power	kW	0,37	0,39	0,42	0,67	0,71	1,03	1,12	1,12	1,12	1,55
D version - AC fans	n.	1	1	1	1	1	1	1	1	1	1
Air flow	m^3/h	2.330	2.330	2.330	3.500	3.500	5.610	5.610	5.610	5.610	7.880
Available pressure (min-max)	Pa	20-67	20-51	20-21	20-67	20-28	20-124	20-78	20-78	20-78	20-170
Motor input power	kW	0,40	0,42	0,46	0,71	0,76	1,07	1,15	1,15	1,15	1,75
Sound pressure level - 2m											
U Version	dB(A)	52	52	52	55	55	58	59	59	59	61
V Version	dB(A)	47	47	47	50	51	54	54	54	54	56
B Version	dB(A)	48	48	48	51	52	55	55	55	55	57
D version	dB(A)	49	48	49	52	52	55	56	56	56	58
Dimensions and weight											
Length	mm	550	550	550	750	750	980	980	980	980	1.160
Width	mm	550	550	550	550	550	750	750	750	750	850
Height	mm	1.980	1.980	1.980	1.980	1.980	1.980	1.980	1.980	1.980	1.980
Weight	kg	176	187	191	239	245	293	302	346	302	375
Power supply	V / Ph/Hz	400 / 3 / 50 + T + N									

ED.H - 1 circuit

Frame		4			5				6	7	
Model		**331**	**371**	**421**	**461**	**501**	**551**	**591**	**771**	**921**	**991**
AMBIENT TEMP. 27 - 50% R.H.											
Total Cooling Capacity	kW	34,4	40,4	45,3	48,9	53,6	56,8	64,0	84,6	101,0	108,7
Sensible Cooling Capacity	kW	28,9	34,8	33,4	43,7	45,4	48,5	56,5	66,5	81,8	85,4
SHR		84%	86%	74%	89%	85%	85%	88%	79%	81%	79%
Input power of compressor	kW	6,7	7,8	8,6	8,5	9,6	9,5	11,1	14,1	18,9	19,1
Condenser water flow	m^3/h	7,1	8,4	9,3	9,9	10,9	11,5	13,0	17,1	20,8	22,1
AMBIENT TEMP. 24 - 50% R.H.											
Total Cooling Capacity	kW	31,4	37,1	41,7	45,6	49,8	53,2	58,9	77,5	92,9	99,8
Sensible Cooling Capacity	kW	27,6	33,3	32,1	42,3	43,9	47,2	54,0	64,0	79,0	82,2
SHR		88%	90%	77%	93%	88%	89%	92%	83%	85%	82%
Input power of compressor	kW	6,6	7,7	8,5	8,4	9,4	9,4	11,0	14,0	18,7	18,9
Condenser water flow	m^3/h	6,6	7,7	8,7	9,3	10,3	10,8	12,1	15,9	19,3	20,6
AMBIENT TEMP. 22 - 50% R.H.											
Total Cooling Capacity	kW	30,3	35,5	40,2	43,6	47,6	50,7	56,2	74,3	88,7	95,5
Sensible Cooling Capacity	kW	27,4	32,8	31,6	40,5	42,3	45,2	52,9	62,3	76,3	79,9
SHR		90%	92%	79%	93%	89%	89%	94%	84%	86%	84%
Input power of compressor	kW	6,6	7,6	8,4	8,3	9,3	9,3	10,9	14,0	18,7	18,8
Condenser water flow	m^3/h	6,4	7,5	8,4	9,0	9,9	10,4	11,6	15,3	18,6	19,8
Scroll compressors	n.	1	1	1	1	1	1	1	1	2	2
Cooling circuits	n.	1	1	1	1	1	1	1	1	1	1
U-V-B Versions - AC fans	n.	1	1	1	2	2	2	2	2	3	3
Air flow	m^3/h	7.880	7.880	7.880	13.820	13.820	13.820	13.820	16.550	21.600	21.600
Available pressure (min-max)	Pa	20-242	20-194	20-194	20-306	20-306	20-260	20-260	20-164	20-236	20-177
Motor input power	kW	1,55	1,69	1,69	2,82	2,82	3,07	3,07	3,49	4,77	5,24
D version - AC fans	n	1	1	1	2	2	2	2	2	3	3
Air flow	m^3/h	7.880	7.880	7.880	13.820	13.820	13.820	13.820	16.550	21.600	21.600
Available pressure (min-max)	Pa	20-170	20-122	20-122	20-234	20-234	20-188	20-188	20-92	20-140	20-81
Motor input power	kW	1,75	1,88	1,88	3,20	3,20	3,44	3,44	3,88	5,51	5,96
Sound pressure level - 2m											
U Version	dB(A)	61	61	61	61	62	62	63	68	65	66
V Version	dB(A)	56	57	57	57	57	58	59	64	60	61
B Version	dB(A)	57	58	58	58	58	59	60	65	61	62
D version	dB(A)	58	59	59	59	59	60	60	65	63	64
Dimensions and weight											
Length	mm	1.160	1.160	1.160	1.860	1.860	1.860	1.860	2.210	2.565	2.565
Width	mm	850	850	850	850	850	850	850	850	850	850
Height	mm	1.980	1.980	1.980	1.980	1.980	1.980	1.980	1.980	1.980	1.980
Weight	kg	375	388	413	518	520	541	544	650	768	803
Power supply	V / Ph/Hz	400 / 3 / 50 + T + N									

The above capacities are referred to D version.
Operation limits: ambient temperature from 19 to 35°C.
Condensing temperature: 48°C.
Condenser water: 30/35°C.
The fan motor input power is referred to the minimum pressure of 20 Pa.
Sound pressure level referred at 2 m distance in free field (ISO 3744) with ducted air inlet and outlet (except for air inlet in U version).
The above weight is referred to U version.

Close control units with water cooled condenser on board

ED.H - 2 circuits

Frame		d				5				
Model		**282**	**332**	**372**	**422**	**462**	**502**	**552**	**592**	**642**
AMBIENT TEMP. 27 - 50% R.H.										
Total Cooling Capacity	kW	27,4	34,7	40,0	45,6	49,3	55,4	58,3	63,6	70,9
Sensible Cooling Capacity	kW	23,0	28,9	31,9	33,8	44,0	48,6	54,0	51,8	56,2
SHR		84%	83%	80%	74%	89%	88%	93%	81%	79%
Input power of compressor	kW	5,3	6,9	7,6	8,9	8,7	10,2	10,2	11,5	13,0
Condenser water flow	m^3/h	5,7	7,2	8,2	9,4	10,0	11,4	11,9	13,0	14,5
AMBIENT TEMP. 24 - 50% R.H.										
Total Cooling Capacity	kW	25,7	31,8	36,7	41,7	46,0	50,8	54,1	58,4	64,9
Sensible Cooling Capacity	kW	22,3	27,8	30,7	32,4	42,4	46,8	52,5	50,0	54,0
SHR		87%	87%	84%	78%	92%	92%	97%	86%	83%
Input power of compressor	kW	5,3	6,9	7,6	8,9	8,7	10,2	10,2	11,4	12,9
Condenser water flow	m^3/h	5,4	6,7	7,7	8,8	9,5	10,6	11,1	12,1	13,5
AMBIENT TEMP. 22 - 50% R.H.										
Total Cooling Capacity	kW	24,5	30,7	35,3	40,2	43,7	48,8	51,4	55,3	62,3
Sensible Cooling Capacity	kW	21,4	27,2	30,0	32,0	41,0	45,4	50,1	47,8	52,8
SHR		87%	89%	85%	80%	94%	93%	97%	86%	85%
Input power of compressor	kW	5,3	6,5	7,6	8,9	8,7	10,1	10,2	11,4	12,9
Condenser water flow	m^3/h	5,2	6,5	7,4	8,5	9,1	10,2	10,7	11,5	13,0
Scroll compressors	n.	2	2	2	2	2	2	2	2	2
Cooling circuits	n.	2	2	2	2	2	2	2	2	2
U-V-B Versions - AC fans	n.	1	1	1	1	2	2	2	2	2
Air flow	m^3/h	7880	7880	7880	7880	13.820	13.820	13.820	13.820	13.820
Available pressure (min-max)	Pa	20-242	20-242	20-194	20-194	20-306	20-306	20-260	20-260	20-260
Motor input power	kW	1,55	1,55	1,69	1,69	2,82	2,82	3,07	3,07	3,07
D version - AC fans	n.	1	1	1	1	2	2	2	2	2
Air flow	m^3/h	7.880	7.880	7.880	7.880	13.820	13.820	13.820	13.820	13.820
Available pressure (min-max)	Pa	20-170	20-170	20-122	20-122	20-234	20-234	20-188	20-188	20-188
Motor input power	kW	1,75	1,75	1,88	1,88	3,20	3,20	3,44	3,44	3,44
Sound pressure level - 2m										
U Version	dB(A)	60	60	61	62	62	62	62	63	63
V Version	dB(A)	55	55	57	57	57	57	58	58	59
B Version	dB(A)	56	56	58	58	58	58	59	59	60
D version	dB(A)	58	58	59	59	59	59	60	60	60
Dimensions and weight										
Length	mm	1.160	1.160	1.160	1.160	1.860	1.860	1.860	1.860	1.860
Width	mm	850	850	850	850	850	850	850	850	850
Height	mm	1.980	1.980	1.980	1.980	1.980	1.980	1.980	1.980	1.980
Weight	kg	411	410	423	423	559	560	579	599	604
Power supply	V / Ph/Hz	400 / 3 / 50 + T + N								

ED.H - 2 circuits

Frame		6		7					8	
Model		**772**	**852**	**922**	**992**	**1022**	**1112**	**1122**	**1442**	**1462**
AMBIENT TEMP. 27 - 50% R.H.										
Total Cooling Capacity	kW	83,0	92,6	100,3	108,6	112,6	121,3	120,9	160,2	163,0
Sensible Cooling Capacity	kW	66,4	71,6	81,5	88,9	94,8	93,6	93,8	122,3	114,8
SHR		80%	77%	81%	82%	84%	77%	78%	76%	70%
Input power of compressor	kW	15,2	17,1	19,1	19,1	19,8	22,6	22,1	28,1	26,5
Condenser water flow	m^3/h	17,0	19,0	20,7	22,1	22,9	24,9	24,8	32,6	32,8
AMBIENT TEMP. 24 - 50% R.H.										
Total Cooling Capacity	kW	76,2	84,7	92,5	99,8	103,3	110,7	110,7	148,8	151,0
Sensible Cooling Capacity	kW	64,0	68,6	78,8	85,6	91,0	89,6	90,0	118,7	110,9
SHR		84%	81%	85%	86%	88%	81%	81%	80%	73%
Input power of compressor	kW	14,9	16,9	18,9	18,9	19,9	22,4	21,8	27,7	26,4
Condenser water flow	m^3/h	15,8	17,6	19,3	20,6	21,3	23,0	23,0	30,6	30,7
AMBIENT TEMP. 22 - 50% R.H.										
Total Cooling Capacity	kW	72,9	81,3	88,4	95,4	98,8	106,1	106,2	140,9	143,2
Sensible Cooling Capacity	kW	62,1	67,6	76,3	83,5	89,4	88,1	88,6	116,1	108,6
SHR		85%	83%	86%	88%	90%	83%	83%	82%	76%
Input power of compressor	kW	14,7	16,8	18,8	18,8	19,9	22,3	21,7	27,5	26,3
Condenser water flow	m^3/h	15,2	17,0	18,6	19,8	20,6	22,2	22,2	29,2	29,4
Scroll compressors	n.	2	2	2	2	4	4	2	4	2
Cooling circuits	n.	2	2	2	2	2	2	2	2	2
U-V-B Versions - AC fans	n.	2	2	3	3	3	3	3	4	4
Air flow	m^3/h	16.550	16.550	21.600	21.600	21.600	21.600	21.600	27.200	27.200
Available pressure (min-max)	Pa	20-164	20-164	20-236	20-177	20-177	20-177	20-177	20-184	20-184
Motor input power	kW	3,49	3,49	4,77	5,24	5,24	5,24	5,24	6,92	6,92
D version - AC fans	n	2	2	3	3	3	3	3	4	4
Air flow	m^3/h	16.550	16.550	21.600	21.600	21.600	21.600	21.600	27.200	27.200
Available pressure (min-max)	Pa	20-444	20-444	20-490	20-431	20-431	20-431	20-431	438,0	438,0
Motor input power	kW	3,07	3,07	4,20	4,81	4,81	4,81	4,81	6,32	6,32
Sound pressure level - 2m										
U Version	dB(A)	65	65	65	65	66	66	67	67	71
V Version	dB(A)	61	60	60	61	61	62	62	62	66
B Version	dB(A)	62	61	61	62	62	63	63	63	67
D version	dB(A)	63	63	63	64	64	64	64	65	67
Dimensions and weight										
Length	mm	2.210	2.210	2.565	2.565	2.565	2.565	2.565	3.100	3.100
Width	mm	850	850	850	850	850	850	850	850	850
Height	mm	1.960	1.960	1.980	1.980	1.980	1.980	1.980	1.980	1.980
Weight	kg	650	695	782	817	834	874	829	1.051	1.090
Power supply	V / Ph/Hz	400 / 3 / 50 + T + N								

The above capacities are referred to D version.
Operation limits: ambient temperature from 19 to 35°C.
Condensing temperature: 48°C.
Condenser water: 30/35°C.
The fan motor input power is referred to the minimum pressure of 20 Pa.
Sound pressure level referred at 2 m distance in free field (ISO 3744) with ducted air inlet and outlet (except for air inlet in U version).
The above weight is referred to U version.

ED.E Version

U front air return, upflow air discharge

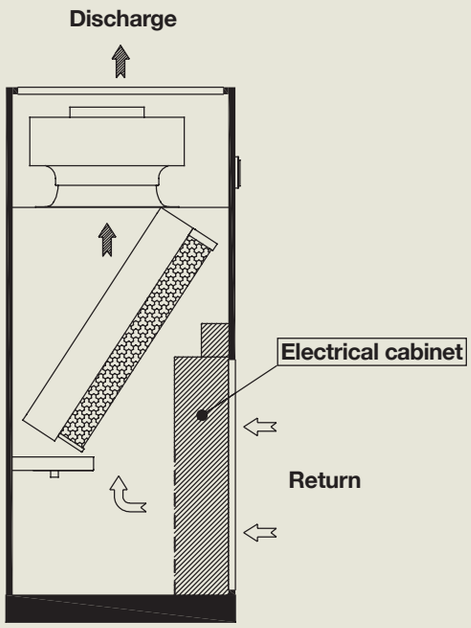

D top air return, downflow air discharge

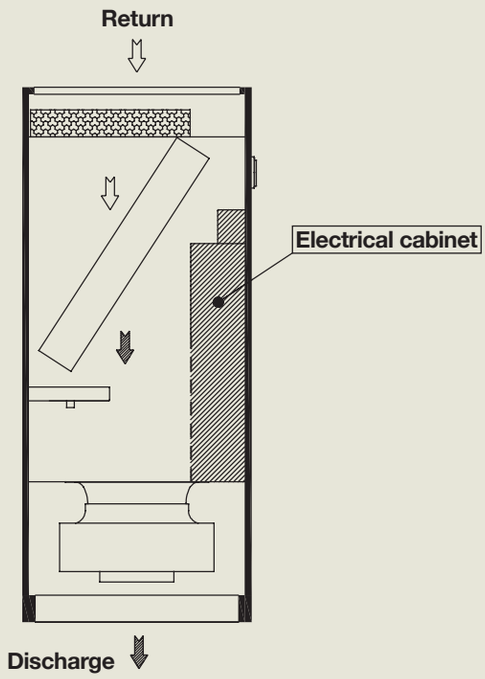

V bottom air return, upflow air discharge

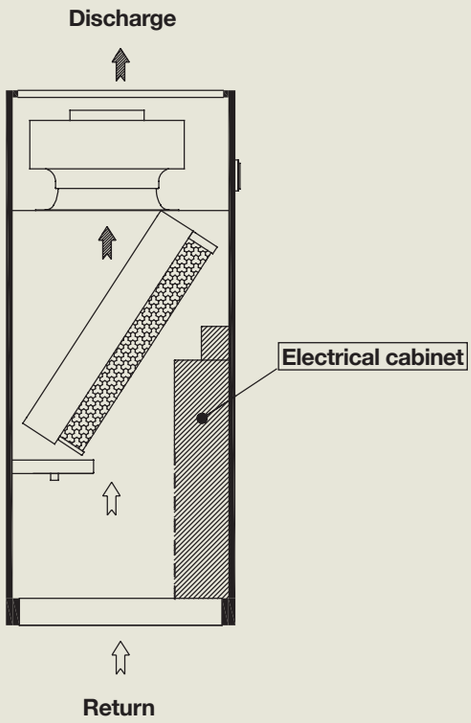

B back air return, upflow air discharge

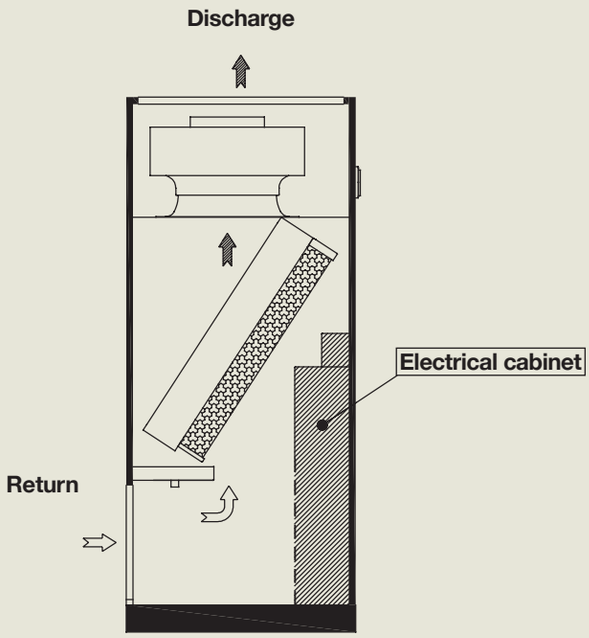

Close control units with remote air condensing unit

ED.E - 1 circuit

Frame		1			2		3		4		5		6	7	
Model		**71**	**81**	**101**	**131**	**161**	**211**	**271**	**331**	**421**	**501**	**591**	**771**	**921**	**991**
AMBIENT TEMP. 27 - 50% R.H.															
Total Cooling Capacity	kW	8,8	11,7	14,5	18,9	24,0	29,0	38,5	40,8	54,2	72,1	90,8	113,9	117,3	151,8
Sensible Cooling Capacity	kW	7,0	9,1	11,0	14,5	17,2	22,6	28,1	31,7	38,8	55,8	65,9	81,5	89,3	108,2
SHR		80%	78%	76%	77%	72%	78%	73%	78%	72%	77%	73%	72%	76%	71%
AMBIENT TEMP. 24 - 50% R.H.															
Total Cooling Capacity	kW	6,3	8,1	10,4	13,2	17,1	20,4	27,5	28,5	38,5	50,4	64,9	81,1	82,6	108,7
Sensible Cooling Capacity	kW	5,9	7,6	9,2	12,1	14,3	18,9	23,6	26,4	32,1	46,6	54,8	67,5	74,4	89,3
SHR		94%	94%	88%	92%	84%	93%	86%	93%	83%	92%	84%	83%	90%	82%
AMBIENT TEMP. 22 - 50% R.H.															
Total Cooling Capacity	kW	5,3	6,8	8,2	10,9	13,3	16,9	21,4	23,8	30,1	41,9	51,0	63,2	65,5	87,7
Sensible Cooling Capacity	kW	5,3	6,8	8,1	10,9	12,4	16,9	20,5	23,8	27,9	41,9	47,6	58,5	65,5	79,3
SHR		100%	100%	99%	100%	93%	100%	96%	100%	93%	100%	93%	93%	100%	90%
U-V-B Versions - AC fans	n.	1	1	1	1	1	1	1	1	1	2	2	2	3	3
Air flow	m^3/h	2.330	2.330	2.330	3.500	3.500	5.610	5.610	7.880	7.880	13.820	13.820	16.550	21.600	21.600
Available pressure (min-max)	Pa	20-99	20-82	20-53	20-99	20-60	20-140	20-94	20-242	20-194	20-306	20-260	20-164	20-236	20-177
Motor input power	kW	0,37	0,39	0,42	0,67	0,71	1,03	1,12	1,55	1,69	2,82	3,07	3,49	4,77	5,24
D version - AC fans	n	1	1	1	1	1	1	1	1	1	2	2	2	3	3
Air flow	m^3/h	2.330	2.330	2.330	3.500	3.500	5.610	5.610	7.880	7.880	13.820	13.820	16.550	21.600	21.600
Available pressure (min-max)	Pa	20-67	20-51	20-21	20-67	20-28	20-124	20-78	20-170	20-122	20-234	20-188	20-92	20-140	20-81
Motor input power	kW	0,40	0,42	0,46	0,71	0,76	1,07	1,15	1,75	1,88	3,20	3,44	3,88	5,51	5,96
Sound pressure level - 2m															
U Version	dB(A)	47	47	48	52	53	56	57	59	59	60	60	63	63	64
V Version	dB(A)	43	43	44	48	49	51	52	54	55	55	56	59	59	59
B Version	dB(A)	43	44	45	49	50	52	53	55	55	56	56	60	59	60
D version	dB(A)	46	46	47	51	52	54	55	57	58	58	59	62	62	63
Dimensions and weight															
Length	mm	550	550	550	750	750	980	980	980	980	1.160	1.160	2.210	2.565	2.565
Width	mm	550	550	550	550	550	750	750	750	750	850	850	850	850	850
Height	mm	1.980	1.980	1.980	1.980	1.980	1.980	1.980	1.980	1.980	1.980	1.980	1.980	1.980	1.980
Weight	kg	148	150	153	194	199	247	255	315	325	429	448	513	600	631
Remote condensing unit	MCX	71 Kc	81 Kc	101 Kc	131 Kc	161 Kc	211 Kc	271 Kc	331 Kc	421 Kc	501 Kc	591 Kc	771 Kc	991 Kc	991 Kc
Power supply	V / Ph/Hz	400 / 3 / 50 + T + N													

ED.E - 2 circuits

Frame		4		5		6	7		8
Model		**332**	**422**	**502**	**642**	**852**	**922**	**1122**	**1462**
AMBIENT TEMP. 27 - 50% R.H.									
Total Cooling Capacity	kW	40,8	54,2	72,1	90,8	113,9	117,3	151,8	189,1
Sensible Cooling Capacity	kW	31,7	38,8	55,8	65,9	81,5	89,3	108,2	135,2
SHR		78%	72%	77%	73%	72%	76%	71%	71%
AMBIENT TEMP. 24 - 50% R.H.									
Total Cooling Capacity	kW	28,5	38,5	50,4	64,9	81,1	82,6	108,7	135,5
Sensible Cooling Capacity	kW	26,4	32,1	46,6	54,8	67,5	74,4	89,3	111,7
SHR		93%	83%	92%	84%	83%	90%	82%	82%
AMBIENT TEMP. 22 - 50% R.H.									
Total Cooling Capacity	kW	23,8	30,1	41,9	51,0	63,2	65,5	87,7	107,6
Sensible Cooling Capacity	kW	23,8	27,9	41,9	47,6	58,5	65,5	79,3	98,3
SHR		100%	93%	100%	93%	93%	100%	90%	91%
U-V-B Versions - AC fans	n.	1	1	2	2	2	3	3	4
Air flow	m^3/h	7880	7880	13.820	13.820	16.550	21.600	21.600	27.200
Available pressure (min-max)	Pa	20-242	20-194	20-306	20-260	20-164	20-236	20-177	20-184
Motor input power	kW	1,55	1,69	2,82	3,07	3,49	4,77	5,24	6,92
D version - AC fans	n	1	1	2	2	2	3	3	4
Air flow	m^3/h	7.880	7.880	13.820	13.820	16.550	21.600	21.600	27.200
Available pressure (min-max)	Pa	20-170	20-122	20-234	20-188	20-92	20-140	20-81	20-90
Motor input power	kW	1,75	1,88	3,20	3,44	3,88	5,51	5,96	7,86
Sound pressure level - 2m									
U Version	dB(A)	59	59	60	60	63	63	64	64
V Version	dB(A)	54	55	55	56	59	59	59	60
B Version	dB(A)	55	55	56	56	60	59	60	61
D version	dB(A)	57	58	58	59	62	62	63	64
Dimensions and weight									
Length	mm	1.160	1.160	1.860	1.860	2.210	2.565	2.565	3.100
Width	mm	850	850	850	850	850	850	850	850
Height	mm	1.980	1.980	1.980	1.980	1.980	1.980	1.980	1.980
Weight	kg	320	331	436	454	519	601	633	787
Remote condensing unit	MCX	332 Kc	422 Kc	502 Kc	642 Kc	852 Kc	922 Kc	1122 Kc	1462 Kc
Power supply	V / Ph/Hz	400 / 3 / 50 + T + N							

The above capacities are referred to D version.
Operation limits: ambient temperature from 18 to 35°C.
Evaporating temperature: 8°C - Inlet vapour quality=0,30.
The fan motor input power is referred to the minimum pressure of 20 Pa.
Sound pressure level referred at 2 m distance in free field (ISO 3744) with ducted air inlet and outlet (except for air inlet in U version).
The above weight is referred to U version.

Accessories

AA - Flooding detector: placed in the downflow units, it is already wired and detects water in the false floor.

AE - Electrical power supply different from standard: mainly, 230V three-phase, 460V three-phase. Frequency 50/60 Hz.

AL - Smoke alarm: it consists of a sensor detecting smoke inside the unit and activating an alarm signal which stops the fans.

B - Adjustable base-frame from 170mm to max 600mm for installation on raised floors. It is provided with adjustable feet.

BC - Hot water coil: one-row or 2-row water coil, placed after the cooling coil for the re-heating and/or the heating of treated air. Provided with modulating actuator and with three-way valve, it is controlled by the microprocessor on board. This option is priority when requested with the electric heaters. (Alternative to BG and not available with REM).

BG - Hot gas coil: placed after the cooling coil, it makes the re-heating of the treated air and is provided with a 3-way valve (ON/OFF) controlled by the microprocessor on board. It is available only with the dehumidification control (options DH). This option is priority when requested with the electric heaters. (Alternative to BC and not available with HG).

BN - Base-frame with conveyor: it is provided with a suitable conveyor facilitating the air flow and remarkably reducing the pressure drop in case of horizontal air flow. It is adjustable in height from min 400mm to max 800mm. (Only for D version).

BS - Base-frame with ON/OFF damper: it is equipped with an ON/OFF motorized damper. This device prevents the air return from the unit when it is not working or in the case some units are working near to it. Available only for D version; for other versions, being a special execution, please contact our Sales Dept.

BSN - Base-frame with conveyor and ON/OFF damper: a single base-frame with both options BS and BN so to optimize efficiency and overall dimensions.

CI - Soundproofing jacket on compressors: made of soundproofing material, wrapped all around compressors so to further reduce the overall sound level of the unit. (Not available for ED.E version).

CS - Compressors inrush counter: Electromechanical device positioned inside the electrical board, recording the total inrush starts of compressors. (Not available for ED.E version).

DH - Dehumidification control system: managed by microprocessor, through the electronic thermostatic valves, it operates on two parameters, ensuring that the dehumidification process is carried out with a constant air flow, without partializing the evaporating coil.
This will optimize the air distribution throughout the room.

DP - Internal double panels: for shutting off the compartments affected by the air flow, they are made from pre-painted and galvanized steel plate, ensuring reduction in the noise transmitted through the panels and a better air tightness even without the external panels so that the access is guaranteed with the doors open during service operation.

EC-LP&HP - Single-inlet EC (electronically commutated) centrifugal fans with backward curved blade (LP not available for D version), made of high-performance composite material, directly coupled to a three-phase electrical rotor with IP54 protection grade, they have the possibility of a continuous regulation of the speed by means of 10V signal, sent and integrated to the control. The fans are fixed on suitable supports reducing the transmission of vibration to the frame and the impeller is statically and dynamically balanced with long-life bearings. Thanks to their technology, the EC fans ensures a lower electrical absorption and sound level, if compared to the traditional centrifugal fans. It is possible to adjust their air flow to the head pressure requested on site. **In case of IT electrical supplies, this option is not available. Please contact our Sales Dept.**

F5-F6-F7-F9 Higher efficiency air filters: pleated filters, supplied as an alternative to standard G4 filters.

FR - Spare filter kit as a replacement to the ones on board of the unit.

H - Humidifier of immersed-electrode type for the modulating production of steam. It is made by a steam cylinder, by a steam distributor, by water inlet and outlet valves and by a maximum level probe. The microprocessor on board indicates when the steam cylinder needs to be replaced. It is electrically protected by a magnetothermic switch.

HG - Hot gas by-pass: it is a mechanical device for modulating the cooling capacity, so to reduce the ON/OFF of compressors and therefore to wait for the re-starting timing, with influence on condensing temperature. It is not available for sizes 1, 2 and 3 and with options BG and DH.

IE - Fumigated wooden crate packing: available on request for critical transports, so to assure a suitable protection to the unit.

IH - RS 485 serial interface: electronic card to be connected to microprocessor, to allow communication between the units and a Carel supervision system. It is possible to fully control the unit from remote. For connection to other supervision systems, the protocol of the controlled parameters is available on request.

IM - Seawood packing: fumigated seawood case and protection bag with hygroscopic salts, suitable for long sea transports.

IP - Magnetothermic switches for auxiliary circuits: when required, they replace the fuses, as a protection of the auxiliary circuits.

IS1 - Class 1 insulating material in conformity to the main European regulations in force.

MF - Phase monitor: electronic device controlling the correct sequence and/or the eventual lack of one of the 3 phases, switching off the unit if necessary.

MN - Lack of neutral wire for 400/3/50 power supply: unit general power supply without neutral wire.

PB - Condensing water pump: micro pump discharging the condensing water produced by the unit, it is factory installed.

PBH - Condensing water and humidifier discharge pump: pump discharging the condensing water produced by the unit and the humidifier discharge water, it is factory installed.

PL - Distribution plenum with front grid and a double raw of adjustable fins for a better air distribution (for versions U,V,B).

PQ - Remote microprocessor display: remote terminal, allowing to display the temperature and humidity values detected by probes, the alarm digital inputs, the outputs and the remote ON/OFF of the unit, to change and program of the parameters, the sound signal and the display of the present alarms.

Accessories

PR - Fresh air inlet: external fresh air inlet with filter, placed on side (standard on the left side), with circular connection (Ø 100 mm).

RE - Electrical heaters: made in aluminium and installed after the cooling coil, for re-heating and/or heating of the treated air. The heating capacity is split on 3 steps max, so to reduce the energy absorption. They are controlled by the microprocessor on board and electrically protected by a magnetothermic switch.

RE M - Oversized Electrical heaters.

RF - Rephasing condensers (available for compressors only): electrical device for rephasing the compressors charge at a power factor cosΦ > 0,9.

RV - Personalized frame painting in RAL colour.

SL - Main switch with external padlock.

ST - Manual calibration damper, in galvanized steel plate with opposed-movement fins. Through the manual control, it is possible to accurately regulate the air flow.

STM - Motorized calibration damper, in galvanized steel plate with opposed-movement fins. Through the modulating control (0-10V), it is possible to accurately regulate the air flow.

SV - Gravity overpressure damper for ducted units, to prevent the air return when the units are not operating, where several units are installed in the same room. Available for U,V,B versions; for D version, being a special execution, please contact our Sales Dept.

VCP - 3-way valve for regulation of the condensing pressure (only for ED.H version).

VP 2-way Pressostatic valve: it is placed on condenser water side and controls the water flow rate according to the unit condensing pressure (only for ED.H version).

WG - Electronic card for interfacing to BMS with SNMP or TCP/IP protocols.

References

- Groupama - Chauray (Francia)
- Telecom Italia - S. Giorgio in Piano (Italia)
- Naphtachimie - Reyes Industrie - La Mede (Francia)
- Università di Vienna (Austria)
- Telecom Italia - Caviaga (Italia)
- Data Centre - Brisbane (Australia)
- Data Centre - Melbourne (Australia)
- Azienda Cosmetica S.I.R.P.E.A. S.p.a. - S. Giuliano M.se (Italia)
- Archives C.G. - Majotte (Francia)
- Ministère de l'Environnement - Tunisi (Tunisia)
- Data Centre - Vieira de Minho (Portogallo)
- Hewlett Packard - Holzgerlingen (Germania)
- Ancotel - Francoforte (Germania)
- Stabilimento Marcegaglia - Ravenna (Italia)
- Fendi Show Room - Roma (Italia)
- Multisala Milanofiori - Assago (Italia)
- Parlamento Europeo - Bruxelles (Belgio)
- Sala CED Ospedale SS Annunziata - Cento (Italia)
- Manifattura Tabacchi - Taviano (Italia)
- Base Aerea 705 - Tours (Francia)
- Sanofi Aventis - Strasburgo (Francia)
- Usine Esso - Fos Sur Mer (Francia)
- Aeroporto Schipol - Amsterdam (Olanda)

a-3.it

Codice ED-EN-12/01

Reg. N° 048
UNI EN ISO 9001:2008
UNI EN ISO 14001:2004

Emicon AC S.p.a.
Via A. Volta, 49 - 47014 Meldola (FC)
T. +39 0543 495611
F. +39 0543 495612
emicon@emiconac.it
www.**emiconac**.it